REVISIONS		
ISS	ZONE	DESCRIPTION\PER REQUEST\DATE

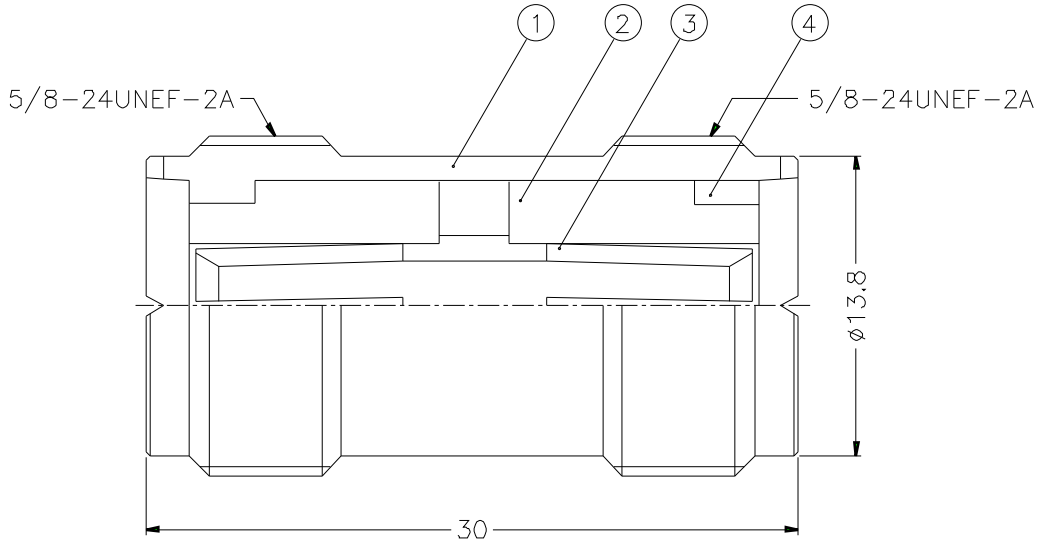

NOTES: FINISH (PLATING THICKNESS IN MICRO-INCHES)
1. BRASS PER QQ-B-626
2. NICKEL PL 100 MIN. THICK OVER COPPER STRIKE
3. SILVER PL 200 MIN. THICK OVER COPPER STRIKE
4. PHENOLIC, YELLOW PER PANTONE 11DC

NO.	DESCRIPTION	MATERIAL	FINISH	Q'TY	DRAWING NO.
4	RING	NOTE 1	NOTE 2	1	U7900-4
3	CONTACT PIN	NOTE 1	NOTE 3	1	U7900-3
2	INSULATOR	NOTE 4	NOTE 4	2	U7900-2T-50
1	BODY	NOTE 1	NOTE 2	1	U7900-1

DIMENSIONS ARE IN MILLIMETERS

UNLESS OTHERWISE SPECIFIED TOLERANCES
0.5-6 = ±0.2
6-30 = ±0.4
30-120 = ±0.6
120-315 = ±1
315-1000 = ±1 6
1000-2000 = ±2 4

SCALE 3/1 ISSUE A

PART NO. U7071A1-NPHS-50

APPROVED DATE 10-11-01'

CHECKED DATE 10-11-01'

DRAWN DATE 10-11-01'

FILE NO.

Amphenol

TITLE
UHF FEMALE TO FEMALE ADAPTOR

DRAWING NO.

ITEM NO.